Section 3 Integrated Management Practices

A variety of Low Impact Development (LID) design concepts and specific engineering solutions are presented in this chapter and are further detailed as Fact Sheets in Appendix 4. Each Fact Sheet illustrates an approach to design and construction of developed areas for increasing stormwater infiltration, providing stormwater retention, slowing runoff, and/or reducing impervious developed areas. The techniques presented here are not all-inclusive, and are not appropriate for every site or condition, but it is anticipated that, once the intent and utility of these design concepts and engineering solutions are understood, planners and designers will use their ingenuity to develop the appropriate "treatment train" of LID strategies consistent with water quality goals.

The various categories or types of development listed in Section 2 present unique challenges which make certain LID solutions appropriate for some types of development but not for others. For example, permeable pavement may be an effective and appropriate solution for a low-rise office building, however, in a high-rise residential or office building with virtually no part of the site left undeveloped and with parking provided underground, permeable pavement would not be an effective or appropriate solution. Additionally, downstream conditions on neighboring properties, manufactured slopes, the location of structures and utilities among many other design aspects of a project will present unique challenges for designers and engineers and may make what are otherwise effective LID solutions inappropriate for the specific site. ***All LID "infiltration BMPs" proposed for a specific project shall be reviewed and approved for use in the project by the project's geotechnical engineer, civil engineer, or other qualified licensed professional to avoid the potential for slope failure, water seepage or migration under structures or on to neighboring property, conflicts with underground utilities, or other potential conflicts with engineering and design objectives. Project plans must be designed in accordance with local zoning regulations, ordinances, and community plans.***

Before specific LID solutions can be developed for a particular project, the project designer must determine the appropriate development category for the project (e.g., multifamily residential). Once the designer has determined the appropriate development category for the project a multitude of specific design considerations must be taken into account when determining the project's runoff and hydrology conditions. These design considerations include grading and the creation of slopes, selection of paving materials, collection and channeling of roof, driveway, parking, and road surface runoff, grading, soil conditions and the creation of slopes, and many other design aspects of the project.

The individual design aspect of a project may make little difference to the overall hydrological characteristics of the project, but taken together, these design aspects create significant changes to the natural hydrology of the project site and, likewise, significant challenges in meeting stormwater quality goals. Consistent with the concept of starting at the source, a combination of individual LID solutions may be required for a particular project which taken collectively effectively mitigate the project's water quality impacts.

3.1. Hydrologic Design

Drainage systems can achieve stormwater management goals by using one of three basic elements: infiltration, retention/detention, and biofiltration. These elements can be implemented either alone or in combination, depending on site and other conditions.

3.1.1. Infiltration

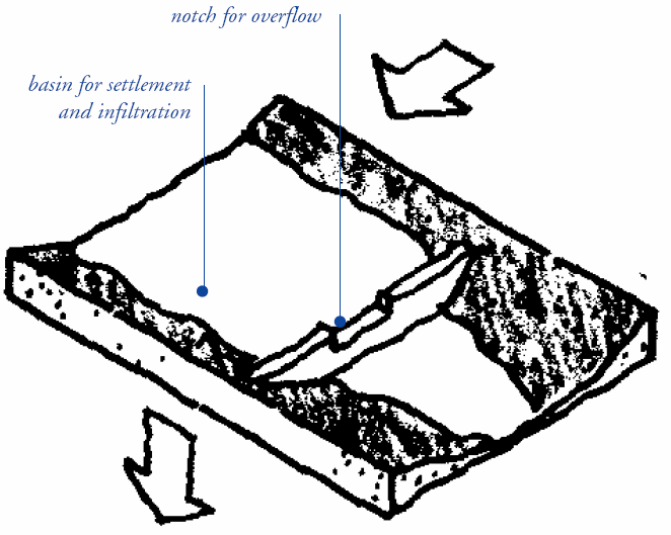

Infiltration is the process where water enters the ground and moves downward through the unsaturated soil zone. Infiltration is ideal for management and conservation of runoff because it filters pollutants through the soil and restores natural flows to groundwater and downstream water bodies. Attenuating flow through infiltration, while allowing evaporation and evapotranspiration is an effective stormwater management practice in blocking the transport of pollutants to receiving waters. An infiltration system is designed to match pre-development condition infiltration rates and to infiltrate the majority of runoff from small storms into the soil rather than discharging it into a surface water body. Infiltration basins can range from a single shallow depression in a lawn, to an integrated swale, pond, and underground storage basin network.

Site soil conditions generally determine if infiltration is feasible. In Soil Groups A and B (see Appendix 3, Section B.1) infiltration is usually acceptable, but it is severely limited in Soil Groups C and D. It is also limited where high groundwater, steep slopes, or shallow bedrock is present. The base of an infiltration system must have a vertical distance of at least 10 feet from the seasonal high groundwater mark (water table). Infiltration is also not appropriate in or directly above manufactured slopes, where infiltrated flows could cause slope failures, near building foundations, or where downstream neighboring properties would be adversely affected.

Infiltration basins can be either open or closed. Open infiltration basins, which include ponds, swales, and other landscape features, are usually vegetated – the vegetation maintains the porous soil structure, reduces erosion, and utilizes water through evapotranspiration. In arid regions, Xeriscaped rock-lined basins are common. Closed infiltration basins can be constructed under the land surface with open graded crushed stone, leaving the surface to be used for parking or other uses (see Fact Sheet 11). Subsurface, closed basins are generally more difficult to maintain and more expensive than surface systems, and are used primarily where high land costs demand that the land surface be used for economic use.

Other design considerations include clogging that may occur in very fine or poorly drained soils and impacts on slope stability if located uphill from hillside sites. Infiltration basins are best installed at the end of construction, after the site is fully stabilized. If possible, flows should be bypassed until the site is stabilized, as construction-related runoff may contain a high proportion of silts that can clog the basin floor.

Infiltration systems have been used by CALTRANS and local jurisdictions in California for about three decades [25], though heavy clay soils sometimes limit their local application. The basic design goal of infiltration systems is to provide opportunities for rainwater to enter the soil. This is generally accomplished by retarding the flow of runoff, and by bringing it into contact with the soil, either by holding it in ponds or subsurface reservoirs or moving it slowly along the ground surface. Infiltration basins are most economical if placed near the source of runoff, but they should be avoided on steep, unstable slopes, near building foundations, within 100 feet of water wells, or other structures.

Infiltration Practices are discussed below:

3.1.1.1. Infiltration Trench

Infiltration trenches temporarily hold stormwater runoff within a sub-surface trench prior to infiltration into the surrounding soils. An infiltration trench is similar in function to an infiltration basin except that an infiltration basin's stored volume is held above ground, while an infiltration trench's stored volume is held below ground.

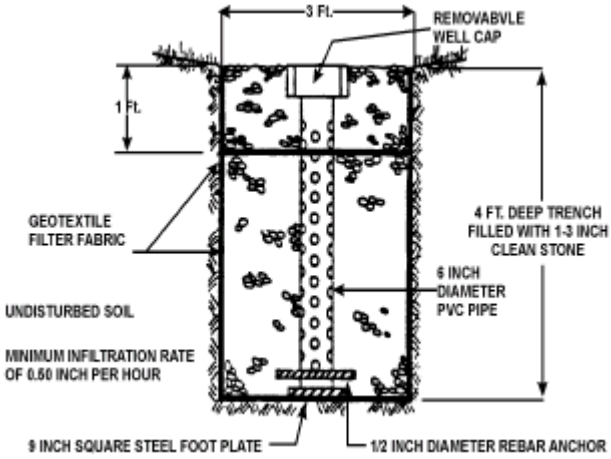

Photograph: City of Encinitas, Detention/Infiltration Area

For more information on Infiltration Trenches please see **Fact Sheet 1** in Appendix 4.

3.1.1.2. Infiltration Basin

Infiltration basins are sited in either natural or excavated open areas and are designed to temporarily hold stormwater runoff prior to evaporation and infiltration through the basin floor. They are similar in function to infiltration trenches except that an infiltration basin's stored volume is held above ground, while an infiltration trench's stored volume is held below ground.

For more information on Infiltration Basins please see **Fact Sheet 2** in Appendix 4.

3.1.2. Retention and Detention

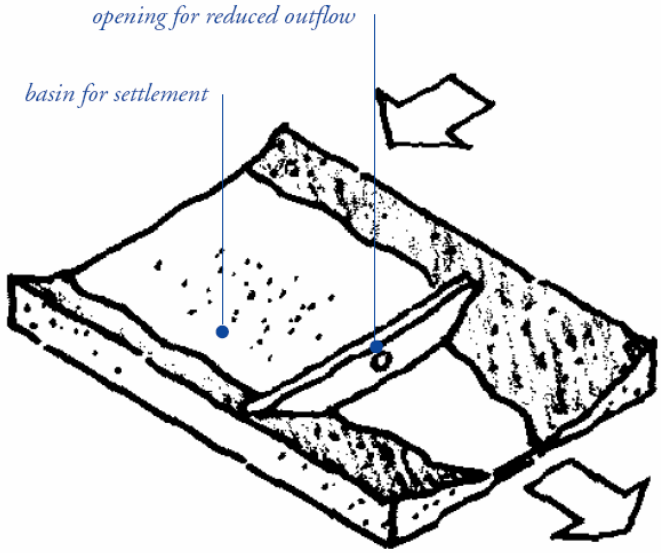

Retention and detention systems differ from infiltration systems primarily in intent. While infiltration systems are intended to percolate water into the soil, retention and detention systems are designed primarily to store runoff for gradual release or reuse. Detention systems store runoff for up to 72 hours after a storm and are dry until the next storm event. Detention facilities provide pollutant removal by temporarily capturing runoff and allowing particulate matter to settle prior to release to surface waters. Retention facilities are used to capture runoff, which is subsequently withdrawn or evaporated [13]. Properly designed retention and detention systems release runoff slowly enough to reduce downstream peak flows to their pre-development levels, allow fine sediments to settle, and uptake dissolved nutrients in the runoff where vegetation is included. Retention and detention systems are most appropriate for areas where water percolates poorly through the soil.

Detention and retention facilities and other practices that temporarily store runoff also evaporate it and allow for plant evapotranspiration. Evaporation from runoff detention and retention areas, including rooftops, streets, basins, and ponds can be an important mechanism for runoff management within San Diego's warm, dry climate [13].

Outlets of detention systems may clog easily if not properly designed and maintained. Retention system outlets must both maintain the permanent pool and release the remainder of runoff at a controlled rate during each storm. Common outlet designs are orifices, perforated risers, and V-notch weirs, with an emergency spillway provided to safely convey storms larger than the stormwater quality design storm [11].

3.1.2.1. Extended Detention (dry) Ponds

Photograph: City of Encinitas, Volleyball Court/ Detention Area

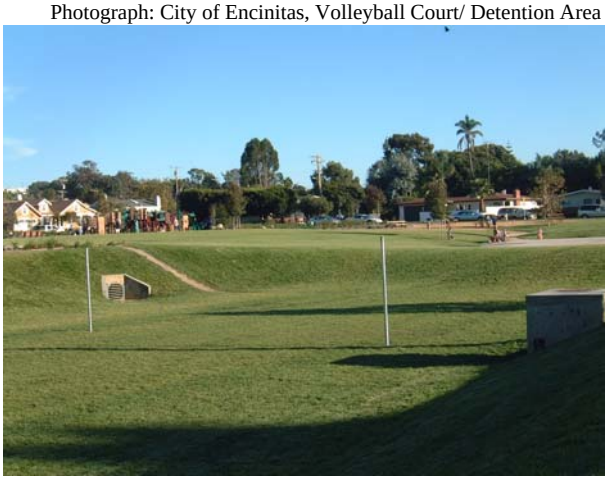

Extended detention (dry) ponds can be used for both pollutant removal and flood control. These ponds store water during storms anywhere from a day to a few days, discharge it to adjacent surface waters, and are dry between storms. Clay or impervious soils should not affect pollutant removal effectiveness, as the main removal mechanism is settling. Extended detention ponds are generally appropriate for developments of ten acres or larger, and have the potential for multiple uses including flood control basins, parks, playing fields, tennis courts, open space, and overflow parking lots. It is important to consider design elements to improve pond safety. Most importantly, detention basin side slopes should be constructed at 3:1 or flatter. This prevents people from accidentally falling into deep water.

For more information on Dry Ponds please see **Fact Sheet 3** in Appendix 4.

3.1.3. Biofilters

Biofilters can include rock and vegetated swales, filter strips or buffers, sand filters, and bioretention. Biofilters are effective if flows are slow and depths are shallow. Shallow and low-velocity flows are generally achieved by grading the site and sloping pavement in a way that promotes sheet flow of runoff. The slow movement of runoff through vegetation provides an opportunity for sediments and particulates to be filtered and degraded through biological activity [25]. In draining soils, the biofilter also provides an opportunity for stormwater infiltration, which further removes pollutants and reduces runoff volumes. Furthermore, biofiltration devices can be designed with soil amendments to allow for some flow attenuation.

Photograph Courtesy of EOA, Inc.

Slow, shallow sheet flow is maintained in the biofilter by constructing it with gently sloping sides based on slope stability. The key concept is to move water slowly through the vegetation at a shallow depth for a minimum critical time. Biofilters should be vegetated (and/or rock-lined) with appropriate plant material such as Xeriscape plants and/or salt grass to match the climatic/soil conditions and relevant landscaping requirements. In the dry arid

regions of the County, rock swales and Xeriscaping are appropriate to meet State water conservation goals.

Biofilters are especially applicable to parking lots, parkways, and along highways as the long aisles can be sloped into linear grass or rock swales to collect and treat runoff from pavement surfaces. Adjacent pavement elevations should be set slightly higher than the adjacent biofilter. If water enters at concentrated points, as opposed to sheet flow, erosion control should be included at inlets and outlets [26].

3.1.3.1. Vegetated Swales / Rock Swales

Photograph Courtesy of EOA, Inc.

Vegetated or rock swales can be a particularly effective design strategy in large conventionally paved parking lots. Parking lot drainage can be integrated with landscaping to provide filtration, evaporation, infiltration and detention of stormwater. Swales provide low maintenance and act as linear biofilters along the perimeter of the lot or along internal islands. Stormwater is directed to these linear landscaped spaces and travels slowly over rocks and vegetated surfaces, allowing pollutants to settle and slow runoff velocities. Check dams or gravel weirs can also be added to swales to further slow and spread concentrated flows.

For more information on Swales please see **Fact Sheet 4** in Appendix 4.

3.1.3.2. Vegetated Filter Strips

Filter strips are areas of either planted or native vegetation, situated between a potential, pollutant-source area and a surface-water body that receives runoff. The term 'buffer strip' is sometimes used interchangeably with filter strip. Vegetated filter strips are broad sloped open vegetated areas that accept shallow runoff from surrounding areas as distributed or sheet flow.

For more information on Vegetated Filter Strips please see **Fact Sheet 5** in Appendix 4.

3.1.3.3. Sand Filters

Sand filters have proven effective in removing several common pollutants from storm water runoff. Sand filters generally control storm water quality, providing very limited flow rate control [27]. The purpose of sand filters is to manage the first flush, which typically contains the highest concentration of pollutants.

For more information on Sand Filters please see **Fact Sheet 6** in Appendix 4.

3.1.3.4. Bioretention

Bioretention systems are essentially a surface and sub-surface water filtration system. In function they are similar to sand filters. However, whereas sand filters provide water quality treatment via passage of stormwater through a sand medium, Bioretention systems incorporate both plants and underlying filter soils for removal of contaminants.

For more information on Bioretention please see **Fact Sheet 7** in Appendix 4.

Photograph Courtesy of EOA, Inc.

3.2. Permeable Pavement Design

Permeable pavements can be used for infiltrating stormwater while simultaneously providing a stable load-bearing surface. While forming a surface suitable for walking and driving, permeable pavements also contain sufficient void space to infiltrate runoff into the underlying reservoir base course and soil. In this way they can dramatically reduce impervious surface coverage without sacrificing intensity of use.

Photograph: City of Encinitas, Permeable Pavement & Rock Edge

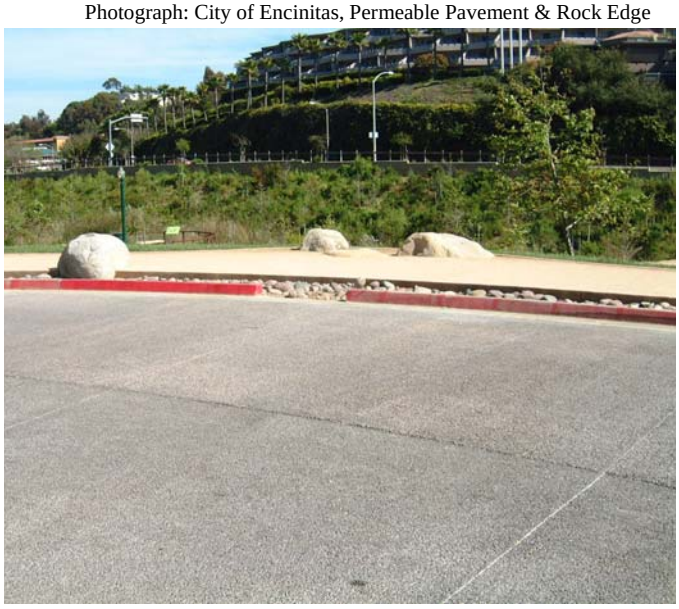

There are four main categories of permeable pavements: poured in-place pervious concrete, permeable asphalt concrete, unit pavers, and granular materials. All of these permeable pavements (except turf block) have in common a reservoir base course. This base course provides a stable load-bearing surface as well as an underground reservoir for water storage. The base course must meet two critical requirements:

- It must be open graded, meaning that the particles are of a limited size range, so that small particles do not choke the voids between large particles. Open-graded crushed stone of all sizes has a 38 to 40% void space, allowing for substantial subsurface water storage [28].

- It must be crushed stone, not rounded river gravel. Rounded river gravel will rotate under pressure, causing the surface structure to deform. The angular sides of a crushed stone base will form an interlocking matrix, allowing the surface to remain stable.

Depending on the use of the surface, a permeable, engineered base section may need to be added to support the intended load. This pertains to applications subject to heavy vehicle loads, but is also important for large areas where settling could result in unwanted puddling on surfaces such as pedestrian walkways.

When used properly, permeable pavement can facilitate biodegradation of the oils from cars and trucks, help rainwater infiltrate soil, decrease urban heating, replenish groundwater, allow tree roots to breathe, and reduce total runoff [29].

Pervious concrete and permeable asphalt are two emerging paving materials with similar properties. Like their impervious, conventional counterparts, both make a continuous, smooth paving surface. They differ from their conventional counterparts in that they

allow water to pass through the surface course to the rock base course that serves as a reservoir and infiltration basin for stormwater. Both pervious concrete and permeable Asphaltic Concrete share similar design considerations.

Conventional Concrete and Asphalt

Conventional concrete and asphalt (technically known as Portland cement concrete and asphaltic concrete, respectively) are impervious pavements widely used in site development. Because of their ease of installation, flexibility, durability, economy, and load bearing capabilities, concrete and asphalt are the most commonly used pavement materials. With a runoff coefficient of near 1.0, conventional concrete and asphalt pavements are principal contributors to impervious land coverage in most development. In site design for stormwater quality, these materials are best used sparingly. If more permeable pavement materials cannot be used, minimizing the area of concrete and asphalt surfaces through clustering and other techniques will reduce the resulting impervious land coverage. For remaining area, designing asphalt and concrete pavement surfaces to slope towards pervious areas instead of into directly-connected collection structures will reduce their negative impact on water resources.

3.2.1. Pervious Concrete

Pervious concrete, also known as Portland cement pervious pavement, is most commonly used in Florida, where it was developed in the 1970s. Pervious concrete is a discontinuous mixture of coarse aggregate, hydraulic cement and other cementitious materials, admixtures, and water, which has a surface-void content of 15-25%, allowing water and air to pass through the pavement.

Pervious concrete, like other concretes, acts as a rigid slab. It has an open, rough appearance and provides a walking or riding surface similar to aggregate concrete. An aggregate base course can be added to increase total pavement thickness or hydraulic storage. Pervious concrete is an extremely permeable material: in tests by the Florida Concrete and Products Association, permeability of new surfaces has been measured as high as 56 inches per hour. With improper installation or mix, permeability can be reduced to 12 inches per hour. Even after attempts to clog the surface with soil by pressure washing, the material retained some permeability [30]. Because of its porosity, pervious concrete pavements usually do not require curbs and gutters for primary drainage control.

Pervious concrete may be suitable for light to medium duty applications such as residential access roads, residential street parking lanes, parking lots, overflow parking areas, utility access, sidewalks, bike paths, maintenance walkways/trails, residential driveways, stopping lanes on divided highways, and patios.

For more information on Pervious Concrete please see **Fact Sheet 8** in Appendix 4.

3.2.2. Permeable Asphalt Concrete (AC)

Permeable AC consists of an open-graded asphalt concrete over an open-graded aggregate base, over a draining soil. Unlike traditional asphalt concretes, permeable AC contains very little fine aggregate (dust or sand), and is comprised almost entirely of stone aggregate and asphalt binder. Without fine sediment filling the voids between larger particles, permeable AC has a void content of 12-20% which makes it very permeable.

In installations where permeable AC has been used over a permeable base, the pavement becomes an infiltration system which allows water to pass through the surface and collect in the open-graded aggregate base. This will achieve stormwater management without curb or gutter systems. In these sites which mostly consist of parking lots and light duty roads in the eastern United States, permeability has been maintained over long periods without special maintenance. On light duty streets built of permeable AC, some loss of porosity occurs in localized areas due to sedimentation or scuffing at intersections due to repeated wheel turning, but the overall performance of the pavement is not significantly compromised [31]. Permeable AC is widely used by CALTRANS as a wearing course on freeways because its porosity creates a superior driving surface in rainy weather. These installations are always over an impermeable asphalt layer and are not permeable pavements [32]

Permeable AC may be suitable for light to medium duty applications such as residential access roads, residential street parking lanes, parking lots, overflow parking areas, utility access, sidewalks, bike paths, maintenance walkways/trails, residential driveways, stopping lanes on divided highways, and patios. Permeable AC has also been used in heavy application such as airport runways and highways because its porosity creates a favorable driving surface in rainy weather [32]. It increases vehicle capacity of the highways without the expense of widening. As such, interstate highways in Georgia and Oregon have been repaved with permeable AC for safety reasons. Permeable AC allows better drainage, traction, and visibility [29].

For more information on Permeable AC please see **Fact Sheet 9** in Appendix 4.

3.2.3. Permeable Pavers

Permeable pavers are an alternative to conventional pavement and can create an opportunity for infiltration of stormwater runoff and groundwater recharge. For areas that are not heavily trafficked, permeable pavers are also an alternative to conventional asphalt and concrete. Permeable pavers are modular systems with pervious openings that allow water to seep through. Runoff that permeates through is either detained in an underlying gravel bed, infiltrated into the underlying soil, or both. Types of permeable pavers include open-celled unit pavers or modular blocks made of concrete or brick with pervious openings.

Open-celled unit pavers are pre-assembled, flexible plastic grid networks that utilize soil and turf/salt grass or gravel backfill to fill the blocks and create a flat surface. 3.2.3.1 demonstrates one type of open-celled unit paver. The grid systems have a solid

support structure surrounding an open cell where the grass or gravel is placed. Some systems have hollow rings or honeycombs with a base, while others have open cells without bases. The plastic grids are flexible, allowing for use on uneven surfaces. These systems work well in overflow parking areas, driveways and sidewalks. Open-celled unit pavers can also be made out of concrete.

Concrete block pavers and brick pavers are designed to set on sand or fine gravel and form an interlocking pavement surface. Modular block pavers are designed to bear heavy loads and are well suited for industrial and commercial parking lots, utility access, residential access roads, driveways, and walkways.

For more information on Unit Pavers please see **Fact Sheet 10** in Appendix 4

3.2.3.1. Open Cell Unit Paver

Photograph Courtesy of EOA, Inc.

Open celled unit pavers are available in either precast concrete or plastic and are filled with soil and typically planted with turf. They were developed in Germany in the 1960s to reduce the "heat island" effect of large parking areas and are now used throughout the world. The products vary in size, weight, surface characteristics, strength, durability, interlocking capabilities, proportion of open area per grid, runoff characteristics, and cost. Laboratory tests have shown that open-celled units have runoff coefficients of from 0.05 to 0.35, depending on slope, and surface configuration [31].

When planted with turf, they are generally most successful in overflow parking areas, driveways, or emergency access roads. If installed in heavily used parking areas, the turf often does not get adequate sunlight and on heavily traveled roadways it can be worn away from tire abrasion. Open-celled unit pavers can also be filled with alternatives to turf which includes either inert gravel or a lower maintenance groundcover such as chamomile. These alternatives can absorb some traffic and may be more appropriate to meet the State Water Conservation goals in San Diego. Because of their irregular surface, open-celled unit pavers generally do not provide comfortable walking surfaces, though the degree of comfort varies depending on design.

3.2.3.2. Brick Pavers

Clay-fired brick is an ancient, solid paving material of great durability and flexibility. When laid on a permeable base with sand joints, brick paving provides an opportunity for a limited amount of stormwater infiltration, especially at low rainfall intensities. One experiment found coefficient of runoff volume to rainfall volume between 0.13 and 0.51 at half hour rainfall intensities up to 0.03 inches. This increased to between 0.66 and 0.76

at intensities between 0.06 and 0.12 inches per half hour [31]. The larger the joints, the greater the permeability.

Brick is available in a wide range of colors and finishes, and can be set in a variety of patterns. When laid on sand, it creates a very suitable walking or riding surface. Though it was widely used for roads in the early part of the last century, it is today generally used for driveways, pathways, plazas, and patios.

Because brick is a relatively soft material, brick pavements can develop a rich character over time as the surface becomes slightly worn with use and the natural colors and textures are exposed. Brick is generally comparable in cost with other solid unit pavers, though shipping costs and special finishes or colors can affect the price.

3.2.3.3. Natural Stone Pavers

Natural stone paving materials are available in a wide variety of shapes and colors. Because of their high cost and relative brittleness, they are usually laid in thin pieces on a mortar bed over concrete which makes an impervious pavement. Some natural stone materials, such as flagstone and granite, are available in thicker slabs suitable for placing on sand. When laid in a random pattern with wide sand, gravel, or soil joints (from 1/2 to 4 inches) random cut stone can create a highly permeable pavement. The joints can be planted with small groundcovers or left bare. Smaller, square-cut stones can also be made into permeable pavements. The cobblestone walks of older European cities are a familiar example of natural stone pavement. Stones set in these tighter sand joints can be expected to have permeability similar to brick-on-sand.

Because of their high cost, natural stone pavements are generally limited to patio areas or walkways where they can be attractive accents. Some stone materials, such as flagstone and slate, are relatively brittle and suitable for pedestrian areas only. Paving made of harder stone, such as granite, can bear vehicular loads.

3.2.3.4. Concrete Unit Pavers

Solid, pre-cast concrete unit pavers are available in a wide variety of colors, shapes, sizes, and textures. They are designed to be set on sand and form an interlocking pavement surface that can bear heavy traffic loads. Their permeability and performance is similar to brick-on-sand. Some manufacturers are now producing concrete unit pavers with small voids to increase permeability (e.g. “Ecostone”). The cost of concrete unit pavers is generally the lowest of all unit pavers, though it can vary depending on shipping, special colors or finishes. A monitored demonstration site of Ecostone concrete pavers at the San Diego County Operations Center detected no runoff from the pavers during the 2005-2006 and 2006-2007 wet seasons.

For more information on Unit Pavers please see **Fact Sheet 10** in Appendix 4

3.2.4. Subsurface Reservoir Bed

In some cases parking lots can be designed to perform more complex stormwater management functions. Subsurface stormwater storage and/or infiltration can be achieved by constructing a stone-filled reservoir below the pavement surface and directing runoff underground by means of perforated distribution pipes. Subsurface infiltration basins eliminate the possibilities of mud, mosquitoes and safety hazards sometimes perceived to be associated with ephemeral surface drainage. They also can provide for storage of large volumes of runoff, and can be incorporated with roof runoff collection systems. These underground infiltration and storage systems are relatively expensive, and require extensive engineering, but have been used in a variety of locations in the eastern United States where land values are high and the need to control runoff is great [31]. As emphasis on stormwater management increases, the economic viability of these solutions will increase.

Based on the infiltration rate of the underlying soils, additional storage may be required in the granular sub-base layer of a porous pavement section. The required storage may be based on a comparison of the rate of infiltration of the sub-soils and the design storm hydrograph. However, sites with low permeability soils (type D) may require underdrains and/or liners to prevent seepage from damaging existing structures or slopes. For further information on infiltration considerations, please see Appendix 3.G "LID Treatment BMPs Design Considerations".

For more information on Recharge Beds please see **Fact Sheet 11** in Appendix 4.

3.2.5. Granular materials

A wide variety of loose aggregates can be made to form permeable pavements suitable for walking, jogging, biking, or light vehicular traffic. The size of these granular materials ranges from fine aggregates to large stones, and can be divided into two general categories: gravels and cobbles. Depending on the aggregate size, these granular pavements have a runoff coefficient of 0.20" to 0.40" [31].

If laid on a slope, and subjected to moderate traffic or concentrated runoff, loose gravel can be displaced and require periodic regrading. Weed abatement may be required periodically, though this can be reduced by laying permeable landscape fabric between the gravel and subgrade. Organic materials such as bark or wood chips decompose over time and must be replenished. Some mulches meet federal requirements for playground fall surfaces and can be inexpensive, permeable pavements for outdoor play areas. Installation costs for gravel and other granular materials are generally the least of all permeable pavements, but require a degree of periodic maintenance to preserve the integrity of the pavement surface.

For more information on Granular Materials please see **Fact Sheet 12** in Appendix 4.

3.3. LID Road Design

GENERAL DESCRIPTION

Roads include a significant portion of impervious coverage in a community and are among of the largest contributors of stormwater flows and pollutant loads. LID road design is a strategy to reduce this impact by minimizing impervious coverage and maximizing stormwater infiltration and pollutant uptake.

Road Design Standards

More than any other single element, road design has a powerful impact on stormwater quality. Roads are at the nexus of a wide variety of land use and environmental issues. Considered a number of ways, the road is a large design element. In a typical neighborhood, the public right-of-way (i.e. the road or street) comprises approximately 20 to 25% of total land area, making it the single most important determinant of neighborhood character. Roads also can comprise up to 70% of a residential community's total impervious land coverage with the remainder of impervious land coverage coming from rooftops and other structures. This can make road design one of the greatest factors in a development's impact on stormwater quality. Roads are subject to municipal ordinances, standards, and management which allow local jurisdictions a great deal of control over their design. For these reasons, the road is one of the most important design elements in site planning and an element that can be most directly affected by local ordinances and policies.

Elements of LID Road Design:

- Road layout – Consider alternatives that reduce impervious coverage such as reducing the length of the road network by exploring alternative road layouts. Clustering homes and narrowing lot frontages can reduce road length by reducing the overall development area. Another approach is to lengthen street blocks and reduce cross roads by providing pedestrian and bicycle paths mid-block to increase access,
- Road width – Road width is a function of land use, density, road type, average daily traffic, traffic speeds, street layout, lot characteristics and parking, drainage, emergency access, and underground utilities.
- Cul-de-sac design – Cul-de-sacs create large areas of impervious coverage in neighborhoods. Alternatives to the traditional cul-de-sac can reduce impervious coverage. Examples of alternatives which reduce impervious surfaces are; a T-shaped hammerhead turnaround, standard radius cul-de-sac with landscaped center-island [33] for bioretention (see Section 3.3.6), grid street systems and a loop road network.
- Right-of-way – Reflect the minimum required to accommodate the travel lane, parking, sidewalk, and, if present, vegetation in right of ways.
- Permeable materials – Use permeable materials in alleys and on-street parking where feasible (less than 5% slope).

- Increased access – Create paths to open space and other opportunities for pedestrians and bicyclists in subdivisions where alternative street layouts such as loop networks and cul-de-sacs are utilized.
- Traffic calming features – Traffic circles, chicanes, chokers, and center islands, offer the opportunity for stormwater management through the use of bioretention areas or infiltration within these areas while providing pedestrian safety [34]. (For definitions and examples of chicanes and chokers, see "Traffic Calming: Roadway Design to Reduce Traffic Speeds and Volumes" [34])
- Drainage options:
  Maintain drainage – Preserve natural drainage patterns to the extent feasible and avoid locating streets in low areas or highly permeable soils.
  Uncurbed roads – Build uncurbed roads using vegetated swales where feasible.
  Urban curb/swale system – Runoff runs along a curb and enters a surface swale via a curb cut, instead of entering a catch basin to the storm drain system.
  Concave medians – Depress median below the adjacent pavement and design to receive runoff by curb inlets or sheet flow. This can be designed as a landscaped swale or a biofilter.

The overall objectives for LID road designs are:

- Reduce directly connected impervious area (DCIA) by reducing the overall road network coverage.
- Minimize or eliminate effective impervious area (EIA) and concentrated surface flows on impervious surfaces by reducing or eliminating hardened conveyance structures (pipes or curbs and gutters).
- Infiltrate and slowly convey storm flows in roadside bioretention cells and swales, and through permeable paving and aggregate storage systems under the pavement.
- Design the road network to reduce site disturbance, avoid sensitive areas, and reduce fragmentation of landscape.
- Create connected street patterns and open space areas to promote walking, biking and access to transit and services.
- Maintain efficient fire, safety, and emergency vehicle access.

Driveway, private road and public (non- circulation element) road design is influenced at the individual parcel and subdivision scale and is the focus of this section. Road design is site specific; accordingly, this section does not recommend specific road designs. Instead, the strengths and weaknesses of different road layouts are examined in the context of LID to assist designers in the process of providing adequate transportation systems while reducing impervious surface coverage.

Road Width Considerations. Reduced pavement width is a goal of LID, however the following concerns should be considered during project design:

- On roads where bicycle traffic is especially high, such as designated bike routes wider roads may be advisable to provide adequate space.
- Typical Fire Department standards require greater paved width for emergency vehicle access. A principal concern is that emergency access may be blocked if a

vehicle becomes stalled in the lane. Grid street systems and loop road systems provide multiple alternate emergency access routes to address this concern, though there may be a marginal increase in response times.

- Hillside sites have special access concerns and fire risks. Because of the potential for lanes to be blocked by a single vehicle with no comparable alternate route, reduced street widths may not be advisable on long cul-de-sac streets or narrow hillside sites.

Road Drainage. Concrete curb and gutters are commonly required along both sides of a residential road, regardless of number of houses served. The curb and gutter serves several purposes: it collects stormwater and directs it to underground conveyance drainage systems, it protects the pavement edge, it prevents vehicle trespass onto the pedestrian space, it provides an edge against which street sweepers can operate, and it helps to organize on-street parking. Curb and gutter systems also provide a directly connected conduit to natural water bodies and may act to collect and concentrate pollutants. There are two alternatives to typical curb and gutter systems that meet functional requirements while lessening the street's impact on stormwater quality. Note that both of these alternatives are discussed and recommended in the County's SUSMP.

Private Roads (see [1], and [9]):

1. Rural swale system: road sheet flows to vegetated swale or gravel shoulder, curbs at street corners, culverts under driveways and road crossings;
2. Urban curb/swale system: road slopes to curb, periodic swale inlets drain to vegetated swale biofilter.

Driveways and parking areas:

1. Design residential driveways with shared access, flared (single lane at street) or wheelstrips (paving only under tires); or, drain into landscaping prior to discharging to the stromwater conveyance system.
2. Uncovered parking on private residential lots may be: paved with a permeable surface; or, designed to drain into landscaping prior to discharging to the stormwater conveyance system;
3. Where landscaping is proposed in parking areas, incorporate landscape areas into the drainage design.
4. Overflow parking may be constructed with permeable paving.
5. Reduce overall imperviousness associated with parking lots by providing compact car spaces, minimizing stall dimensions, incorporate efficient parking lanes.

Public (non-circulation element) roads - The design of public roads shall use at least one of the following LID features [9]:

- Reduce sidewalk widths as long as ADA requirements are met
- Incorporate landscape buffer areas between sidewalks and streets

- Design non-circulation element streets for the minimum required pavement widths
- Minimize the number of residential street cul-de-sacs and incorporate landscaped areas to reduce impervious cover
- Urban curb/swale system: street slopes to curb, periodic swale inlets drain to vegetated swale biofilter

For more information on LID Street Design please see **Fact Sheet 14** in Appendix 4.

3.3.1. Public Road Standards

Current Public and Private Road standards mandate 60-80% impervious land coverage in the public right-of-way and/or the Private road easement. Runoff from these impervious surfaces is a principal concern regarding stormwater quality objectives unless the directly connected impervious areas are sufficiently reduced. Road standards that allow a hierarchy of road sizes according to average daily traffic volumes yields a wide variety of benefits: improved aesthetics from street trees and green parkways, reduced impervious land coverage, and reduced heat island effect. If the reduction in road width is accompanied by a drainage system that allows for infiltration of runoff, the impact of roads on stormwater quality can be effectively mitigated.

Public roads may utilize curbs and gutters, though the gutter may be tied to a biofilter or swale rather than an underground storm drain. Sidewalks may be provided on one side of the road, though usually preferable on both sides [35].

For more information on Public Road Standards please see **Fact Sheet 15** in Appendix 4.

3.3.2. Private Road Standards

A Private Road is used where required by Subdivision and Zoning Ordinance requirements. Curbs and gutters are replaced by gravel shoulders that are graded to form a drainage way, with opportunities for biofiltration and landscaping. Road sheet flow drains to a vegetated swale or gravel shoulder. Other characteristics of a private road standard include, curbs at street corners, and the placement of culverts under driveways and road crossings.

Typically, a narrow two-lane paved roadway is provided at approximately 24' wide. Most of the time single vehicles use the center of the paved roadway. Protection of the roadway edge and organization of parking are two significant issues in rural street design. Roadway edge protection can be achieved by flush concrete bands, steel edge, or wood headers. Upon recommendation of the local Fire Authority parking can be restricted by use of signage and/or striping.

For more information on Private Road Standards please see **Fact Sheet 16** in Appendix 4.

3.3.3. Curb-Cuts

Photograph courtesy of Mike Campbell (RBF consulting)

On streets where a more urban character is desired or where a rigid pavement edge is required, curb and gutter systems can be designed to empty into drainage swales. These swales can run parallel to the street, in the parkway between the curb and the sidewalk, or can intersect the street at cross angles, and run between residences, depending on topography. Runoff travels along the gutter, but instead of being emptied into a catch basin and underground pipe, multiple openings in the curb direct runoff into surface swales or infiltration/detention basins. If lined with vegetation or gravel/rock and gently sloped, these swales function as biofilters. Because concentration of flow will be highest at the curb opening, erosion control must be provided, which may include a settlement basin for ease of debris removal.

For more information on Curb-Cuts please see **Fact Sheet 17** in Appendix 4.

3.3.4. Rural Swale Systems

On streets where a more rural character is desired, concrete curb and gutter need not be required. Since there is no hard edge to the street, the pavement margins can be protected by a rigid header of steel, wood or a concrete band poured flush with the street surface. Parking can be permitted on a gravel shoulder. If the street is crowned in the middle, this gravel shoulder also can serve as a linear swale (with appropriate slopes), permitting infiltration of stormwater along its entire length. Because runoff from the street is not concentrated, but dispersed along its entire length, the buildup of pollutants in the soil is reduced. If parking is not desired on the shoulder, signage or striping can be installed along the shoulder to prevent vehicle trespass. In these ways edge treatments other than continuous concrete curb and gutters with underground drainage systems can be integrated into street design to create a headwaters street system that reduces impact on stormwater quality and that captures the most attractive elements of traditional neighborhood design. [9]

For more information on Rural Swale Systems please see **Fact Sheet 18** in Appendix 4.

Road drainage considerations. The perception that surface swale systems require a great deal of maintenance is a barrier to their acceptance. In practice, maintenance is required for all drainage systems, and surface systems can require comparable or less maintenance than underground systems. Design factors for low maintenance include:

- Erosion control at curb openings
- Shallow side slopes and flat bottoms (as opposed to ditches which erode)

- A cobble or rip-rap bottom combined with plantings
- Proper plant selection so that weeds are easily maintained

Maintenance practices for surface systems are different than most urban Public Works Department practices, and some employee retraining may be required to facilitate maintenance of road systems using surface swales instead of concrete curbs and underground pipes. One advantage of surface drainage systems is that problems, when they occur, are easy to fix because they are visible and on the surface.

3.3.5. Concave Median

Conventional median design includes a convex surface rising above the pavement section, with drainage directed towards a curb and gutter system. Runoff is conveyed rapidly off the median and the street directly into a catch basin/underground pipe system, concentrating pollutants and carrying them to water bodies.

If the soil level in the median is designed as a concave surface slightly depressed below the pavement section, water is directed from the street into the median. Concave medians are especially valuable at treating the first flush runoff, which carries a high concentration of oils and other pollutants off the street, especially if the median is designed as a landscaped swale or turf/rock lined biofilter. Because of the relatively small area provided by the median for stormwater infiltration and retention, a catch basin and underground storm drain system may be required. By setting catch basin rim elevations just below the pavement elevation, but above the flow line of the infiltration swale, a few inches of water will collect in the swale before overflowing into the underground system.

For more information on Concave Medians please see **Fact Sheet 19** in Appendix 4.

3.3.6. Cul-de-sac Design

Cul-de-sac streets present special opportunities and challenges. Because cul-de-sac streets terminate, they require a turn-around area large enough to accommodate large trucks. County Fire code requires a minimum paved radius width of 36 feet in residential areas. If an entire 36 foot radius turnaround is paved, it creates a 4,071 square foot impervious circle. Aside from the implications for stormwater quality, this is especially unfortunate as a design element, because it creates a heat island at the front of several homes. A turnaround with a central concave landscaped area can create an opportunity for stormwater infiltration and/or detention. A landscaped area in the center of a cul-de-sac can reduce impervious land coverage depending on configuration. Design of a landscaped cul-de-sac must be coordinated with fire department personnel to accommodate turning radii and other operational needs [36].

For more information on Cul-de-sacs please see **Fact Sheet 20** in Appendix 4.

3.4. LID Parking Lot Design

GENERAL DESCRIPTION

Parking lots contribute a sizeable area of impervious coverage to a community, and are significant sources of stormwater runoff and the discharge of associated pollutants to the storm drain system and local surface waters. Several strategies can be implemented to mitigate this impact, including reducing impervious surfaces, using permeable materials in overflow parking areas and bioretention basins in parking lot islands and perimeter landscaping.

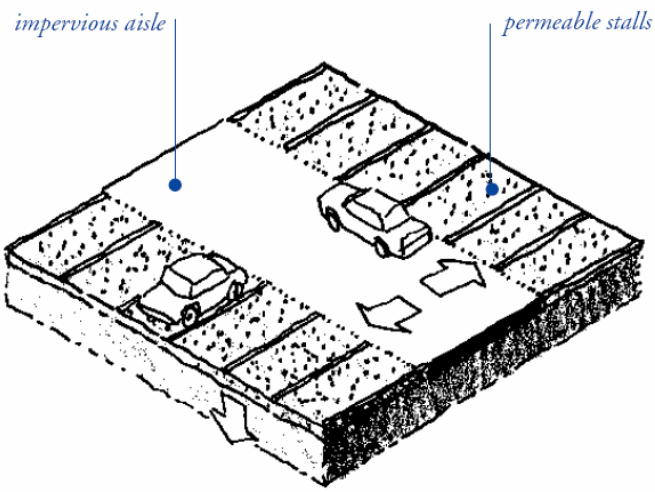

Parking is the greatest single land use in most industrial, office, and commercial development. A standard parking stall, occupies only 160 square feet, but when combined with aisles, driveways, curbs, overhang space, and median islands, a parking lot can require up to 400 square feet per vehicle, or nearly one acre per 100 cars. Since parking is usually accommodated on an asphalt or concrete surface with conventional underground storm drain systems, parking lots typically generate a great deal of directly-connected impervious area which make them a significant contributor to environmental degradation. There are many ways to both reduce the impervious land coverage of parking areas and to filter runoff before it reaches the storm drain system.

Stormwater management in parking lots can mimic natural hydrologic functions by incorporating design features that capture, treat, and infiltrate or detain stormwater runoff rather than conveying it directly into the storm drain system. Management options include:

- Landscaped detention areas (see Fact Sheet 3) can be installed within and/or at the perimeter of parking lots to capture and infiltrate or detain runoff.
- Parking groves, which include permeable landscaped areas designed with grades several inches below the impervious parking surface can delineated by flat concrete curbs, shrubs, trees and bollards (see Fact Sheet 22).
- Permeable surfaces can be installed in down gradient parking stalls and in overflow parking areas. Permeable materials that can be utilized include permeable pavers, permeable AC, and pervious concrete. In some circumstances, gravel or wood chips can also be used.
- Stormwater runoff from the top floor of parking garages can be drained to planter boxes located at the perimeter of the parking lot or at street level.

Reducing Impervious Surfaces

Photograph Courtesy of EOA, Inc.

Research has shown that zoning regulations typically require more parking spaces than are needed. Parking lot size is usually based on peak demand rather than average usage.

Parking codes should be reviewed and revised to either reduce parking minimums or require reduction in directly connected impervious areas. Parking codes should also be revised to allow shared parking for businesses with different hours of peak demand. Bus and shuttle services can be provided between commercial centers that experience peak demands only during holidays and parking areas such as government facilities and schools that are typically vacant over holidays. Other strategies that can also be implemented to reduce the total parking area include compact parking spaces and determining the most space-efficient design for parking spaces (e.g. angled or perpendicular). Consideration should be given to design options such as underground parking or multi-storied garages. As noted above, vegetation and landscaping can be designed to intercept rainfall and capture stormwater. Including trees in parking lot landscaping should also be considered. In addition to reducing impervious coverage, trees reduce the urban heat island effect of parking lots by shading heat-adsorbing surfaces.

For more information on Hybrid Parking, Lots Parking Groves, and Overflow Parking please see **Fact Sheets 21-23** in Appendix 4.

Photograph: City of Encinitas, Roadside GrassCrete parking

3.5. LID Driveway, Sidewalk, and Bike Path Design

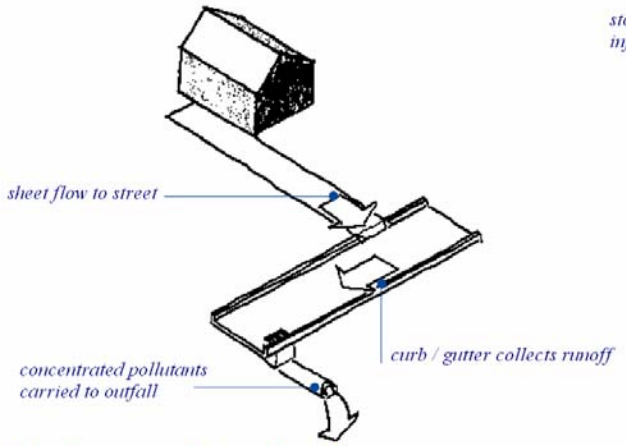

Directly-connected impervious driveway

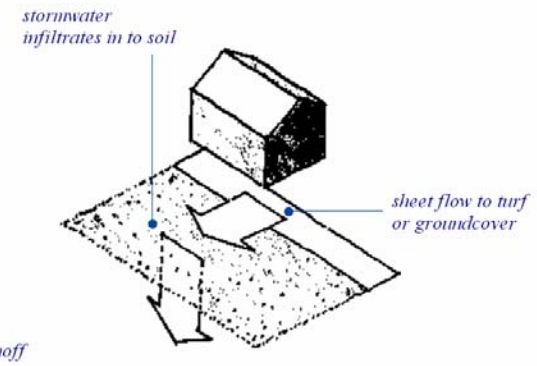

Not directly-connected impervious driveway

Driveways, sidewalks, and bike paths add a significant amount of impervious coverage to a community and are an element of a site's design that can be altered to minimize directly connected impervious areas. Driveways often slope directly to the street and storm drain system and contribute significantly to stormwater pollution. There are three primary strategies that can be implemented to reduce these impacts, including:

- Reduce pavement widths.
- Direct surface flow from pavements to a permeable landscaped area.
- Utilize permeable paving materials

Driveways

Driveways offer a relatively simple opportunity to improve both the aesthetics and permeability of residential developments. By allowing tandem parking, shared driveways, or rear alley access, municipalities can reduce mandated driveway requirements. For designers and developers, the driveway's intimate relationship with the residence, and its relative freedom from government regulation, make it an element that can be designed to increase permeability and market appeal. Some treatments, such as turf-block or gravel, require greater maintenance than poured-in-place asphalt or concrete designs. Other materials, such as brick or unit pavers, require a greater initial expense.

Not Directly-Connected Impervious Driveway

A conventional driveway that drains to the storm drain system is a "directly connected impervious area" which collects and concentrates pollutants. The easiest way to reduce the impact of a conventional impervious driveway on water quality is to slope it to drain onto an adjacent turf or groundcover area. By passing driveway runoff through a permeable landscaped area, pollutants can be dispersed and cleansed in the soil.

Crushed Aggregate Driveway

Gravel and other granular materials can make a suitable permeable pavement for rural and other low-traffic driveways. Because it is lightly used by very slow moving vehicles, a well-constructed driveway of granular material can serve as a relatively

smooth pavement with minimal maintenance. In choosing a granular material for a gravel driveway, use crushed stone aggregate. For proper infiltration and stormwater storage, the aggregate must be open-graded (see Section 3.2: "Permeable Pavements").

Unit Pavers on Sand

Unit pavers on sand can make a permeable, attractive driveway. A pavement of brick-on-sand or turf-block can make the driveway more integrated with the garden rather than an extension of the street penetrating deep into the garden space. For parking, a permeable, engineered base structural section may be required in addition to the sand setting bed. Some unit pavers may also be installed on very fine gravel.

Paving only Under Wheels

Concrete paving only under the wheel tracks is a viable, inexpensive design if the driveway is straight between the garage and the street. By leaving the center strip open to be planted groundcover or filled with a permeable material such as gravel, a driveway of two concrete wheel tracks can significantly reduce impervious surface coverage compared with a single lane concrete driveway. Drainage, climate, and maintenance must be considered with the design of this technique so that the landscape can be planned appropriately.

Flared Driveways

Long driveways or driveways that serve multi-car garages do not require the full multi-lane width along their entire length. The approach to the garage can be a single lane, adequate to accommodate the relatively infrequent vehicle trips, while the front of the garage can be flared to provide access to all garage doors. This strategy can reduce overall pavement cost and land coverage while maintaining adequate access for all parking spaces.

For more information on LID Driveway, Sidewalks, and Bike Path Design please see **Fact Sheet 24** in Appendix 4.

Photograph Courtesy of EOA, Inc.

This page intentionally left blank for reproduction purposes.

3.6. LID Building Design

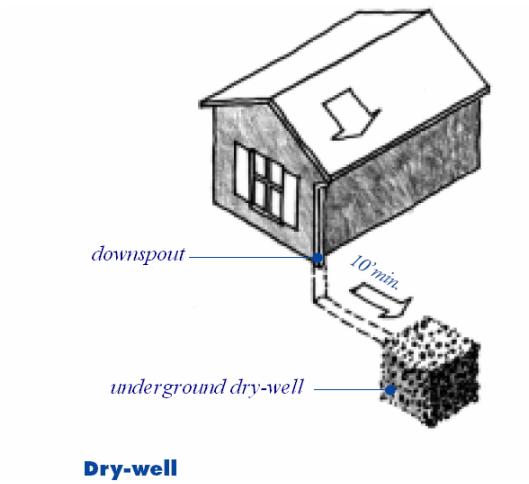

Dry-well

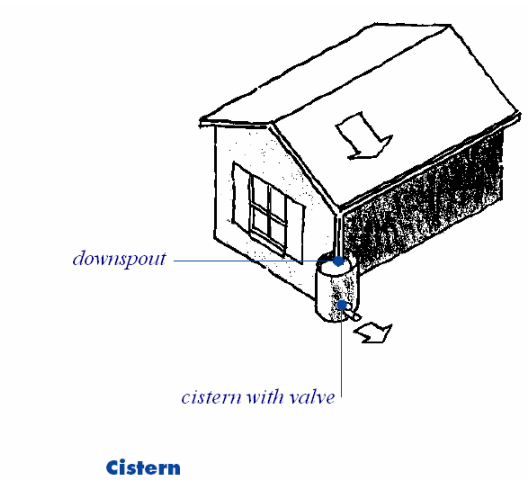

Cistern

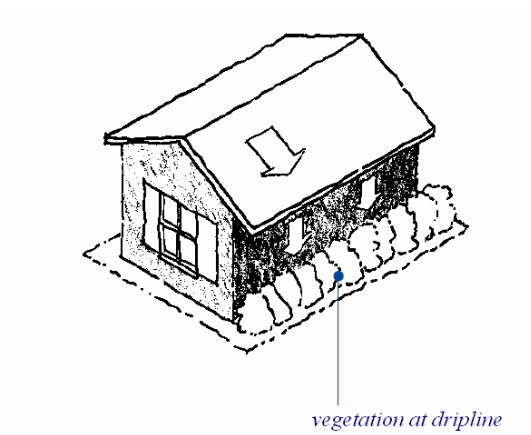

Foundation planting

By definition, buildings create impervious land coverage. An important planning consideration is the site coverage and floor area ratio (F.A.R.). Buildings of equal floor area ratio can have widely different impervious coverage. For example, a two story building with 1,000 square feet of floor area will create 500 square feet of impervious area, while a one story building of the same floor area will create twice the impervious land coverage. Therefore, multi-story buildings have less impact on stormwater quality than single-story building with the same square footage. Once the building size and coverage is determined, there are a limited number of techniques for managing runoff from individual buildings to collect rooftop runoff and allow it to infiltrate into the soil.

3.6.1. Dry-Well

If a gutter and downspout system is used to collect rainwater that falls on a roof, runoff becomes highly concentrated. If the downspout is connected to a dry-well, this runoff can be stored and slowly infiltrated into the soil. A dry-well is constructed by digging a hole in the ground and filling it with an open graded aggregate. An underground connection from the downspout conveys water into the dry well, allowing it to be stored in the voids. To reduce sedimentation from lateral soil movement, the sides and top of the stone storage matrix can be wrapped in a permeable filter fabric, though the bottom may remain open. A perforated observation pipe can be inserted vertically into the dry-well to allow for inspection and maintenance. In practice, dry-wells receiving runoff from single roof downspouts have been successful over long periods because they contain very little sediment. They must be sized according to the amount of rooftop runoff received, but are typically 4 to 5 feet square, and 2 to 3 feet

deep, with a minimum of 1 foot soil cover over the top (maximum depth of 10 feet). To protect the foundation, dry-wells must be set away from buildings as required based on soil type, and must follow local building codes. They must be installed in soils that accommodate infiltration. In poorly drained soils, dry-wells have very limited feasibility unless designed with an underdrain. Dry-wells must receive approval from a qualified, licensed professional.

For more information on Dry Wells please see **Fact Sheet 25** in Appendix 4.

3.6.2. Rain Water Harvesting

A key LID technique in a setting with soils relatively restrictive to infiltration is water harvesting, which can be applied at smaller residential scales using rain barrels or cisterns at larger scales in commercial and light industrial developments. Harvesting has been successful in reducing runoff discharged to the storm drain system and conserving water in applications at all scales.

3.6.2.1. Cisterns & Rain Barrels

Photograph Courtesy of Arid Solutions, Inc.

Cisterns and rain barrels capture roof runoff from the roof downspout and provide an effective way to store and slowly release runoff into the soil. A cistern is an above ground storage vessel with either a manually operated valve or a permanently open outlet. If the cistern has an operable valve, the valve can be closed to store stormwater for irrigation or infiltration between storms. This system requires continual monitoring by the resident or grounds crews, but provides greater flexibility in water storage and metering. If a cistern is provided with an operable valve and water is stored inside for long periods, the cistern must be covered to prevent mosquitoes from breeding. A cistern system with a permanently open outlet can also provide for metering stormwater runoff. If the cistern outlet is significantly smaller than the size of the downspout inlet (say 1/4 to 1/2 inch diameter), runoff will build up inside the cistern during storms, and will empty out slowly after peak intensities subside. This is a feasible way to mitigate the peak flow increases caused by rooftop impervious land coverage, especially for small storms. Cisterns can be incorporated into the aesthetics of the building and garden. The cistern must be designed and maintained to minimize clogging by leaves and other debris. In the dryer regions of the County, cisterns and rain barrels may only fill up a couple times a year and may be more practical when the system is supplemented with graywater from a County Permitted Graywater System.

3.6.2.2. Large Scale Harvesting

Examples exist around the world of harvesting water from much larger buildings than could be served by a rain barrel, including vertically elevated as well as horizontally spread harvesting structures. For example, in downtown Seattle the King County Government Center collects enough roof runoff to supply over 60 percent of the toilet flushing and plant irrigation water requirements, saving approximately 1.4 million gallons of potable water per year [42]. A smaller public building in Seattle, the Carkeek Environmental Learning Center, drains roof runoff into a 3500-gallon cistern to supply toilets [43]. The Natural Resources Defense Council office in Santa Monica is another example of a medium-scale rain harvesting application [44].

For more information on Rain Harvesting please see **Fact Sheet 26** in Appendix 4.

3.6.3. Foundation Planting

For buildings that do not use a gutter system, landscape planting around the base of the eaves can provide increased opportunities for stormwater infiltration and protect the soil from erosion caused by concentrated sheet flow coming off the roof. Foundation plantings can reduce the physical impact of water on the soil and provide a subsurface matrix of roots that encourage infiltration. These plantings must be sturdy enough to tolerate the heavy runoff sheet flows and periodic soil saturation but should not have large woody roots that can grow under and disturb building foundation. Unvegetated foundation swales utilizing cobble and gravel can also be used to protect foundations from potential water damage.

For more information on Foundation Planting please see **Fact Sheet 27** in Appendix 4.

3.6.4. Downspout to Swale

Discharging the roof downspout to landscaped areas via swales allows for polishing and infiltration of the runoff. The downspout can be directly connected to a pipe which daylights some distance from the building foundation, releasing the roof runoff into a swale or landscaped area. An energy dissipater such as rock or cobble is recommended at the outlet. The roof runoff is slowed by the rocks, absorbed by the soils and vegetation, and remaining runoff can then flow away from the building foundation towards the storm drain.

For more information on Downspout to Swale please see **Fact Sheet 28** in Appendix 4.

3.6.5. Vegetated Roofs

Vegetated roofs (also known as green roofs and eco-roofs) offer a number of benefits in the urban landscape including: increased energy efficiency, improved air quality, reduced temperatures in urban areas, noise reduction, improved aesthetics, extended life of the roof, and most importantly improved stormwater management. Stormwater benefits include: reduction of stormwater run-off, reduce quantity of industrial effluent, extend lifetime of infrastructure, reduce CSO events, and reduce flooding potential [37].

Vegetated roofs fall into two categories: intensive and extensive. Intensive roofs are designed with a relatively deep soil profile and are often planted with ground covers, shrubs, and trees. Intensive green roofs may be accessible to the public for walking or serve as a major landscaping element of the urban setting. Extensive vegetated roofs are designed with shallow, light-weight soil profiles and ground cover plants adapted to the harsh conditions of the roof top environment [38].

For more information on Vegetated Roofs please see **Fact Sheet 29** in Appendix 4.

3.7. LID Landscaping Design

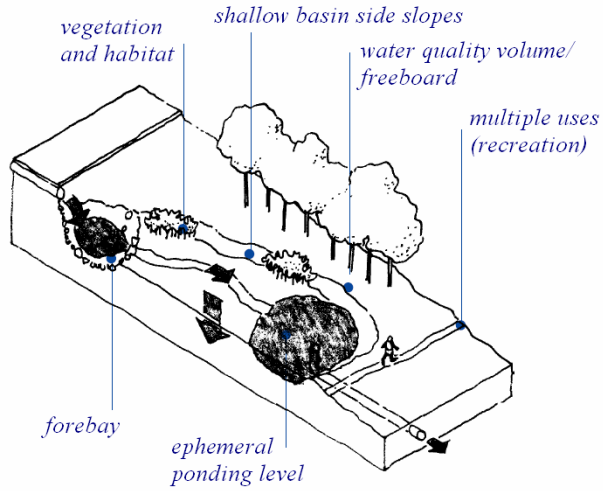

Extended detention (dry) ponds

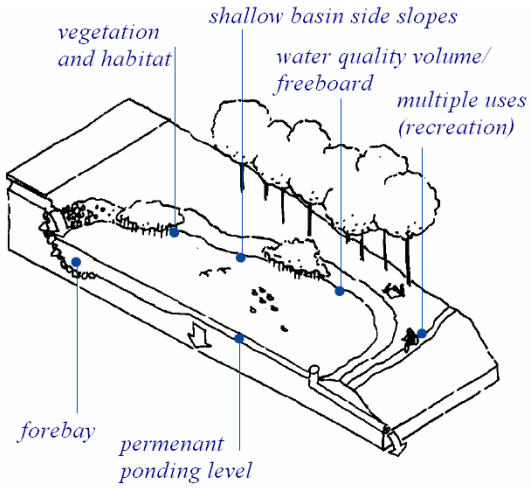

Wet ponds

In the natural landscape, most soils infiltrate a high percentage of rainwater through a complex web of organic and biological activities that build soil porosity and permeability. Roots reach into the soil and separate particles of clay, insects excavate voids in the soil mass, roots decay leaving networks of macropores, leaves fall and form mulch over the soil surface, and earthworms burrow and ingest organic detritus to create richer, more porous soil. These are just a few examples of the natural processes that occur within the soil [39]. In the developed environment, a certain amount of soil must be covered with impervious surface, but the remaining landscape can be designed and maintained to maximize its natural permeability and infiltration capacity.

One simple strategy to improve infiltration is to use the grading of landscape surfaces. If a landscape surface is graded to have a slightly concave slope, it will hold water. The infiltration value of concave vegetated surfaces is greater in permeable soils. Soils of heavy clay or underlain with hardpan provide less infiltration value. In these cases concave vegetated surfaces must be designed as retention/detention basins, with proper outlets or underdrains to an interconnected system.

Aeration techniques such as drilling, scarifying, and roto-tilling can break up soil and enhance percolation. In addition, by properly amending the soil and increasing soil organic matter, water holding capacity can be significantly increased

Water Conservation in Landscaping Act of 1990

The State of California's Department of Water Resources is updating their Water Conservation Landscape Ordinance to establish specific standards for landscape design and irrigation design to assure efficient and responsible use of all available water resources for all citizens within the State. The Ordinance is also intended to implement the new development landscape design requirements of California Assembly Bill 1881, update to the Water Conservation in Landscaping Act [40]. These design requirements will support landscapes that are essential to the quality of life here in San Diego County. The requirements will also assure that we continue to meet a variety of landscaping objectives, including preventing erosion, filtering, treating, and utilizing storm water run-

off. Landscape design, installation, maintenance, and management can and should be water efficient.

All landscape improvements shall conform to the County of San Diego's Landscape Water Conservation Design Manual. Where a local water agency serving a proposed project has adopted more stringent water conservation landscape requirements, the landscaping and irrigation design shall comply with the water agency's requirements.

Where appropriate for the site and the intended stormwater management technique, the landscaping may include natural features such as rock and stone.

Where service is available to the project site and appropriate for the intended use, recycled or reclaimed water shall be used for irrigation.

3.7.1. Soil Amendments

Development activities often remove, disturb and compact topsoil from construction sites. The outcome is a decrease in the infiltration and water storage capacity of post development soils, and an increase in stormwater runoff potential. In addition, soils in the arid climate of San Diego tend to lack organic matter and nutrients, and often have a high silt and/or clay content. Soils high in clay content have slow infiltration rates, resulting in a high runoff potential. By properly amending soils their hydrologic characteristics can be enhanced, leading to increased infiltration and water storage characteristics. Benefits accrued by incorporating soil amendments include decreased stormwater runoff, a decrease in polluted runoff from landscaping practices, and water conservation.

Organic soil amendments improve soils by increasing the water holding capacity in sandy soils, improving the physical characteristics of clay soils by altering the soil structure and percolation rates, and by providing a steady supply of nutrients and organics to help remediate ground water pollution. Properly prepared organic material can increase the microbial diversity in the soil and enhance plant health and immunity to disease. Composted products from licensed facilities are recommended, as these products have undergone a process to reduce pathogens and have a carbon: nitrogen ratio of less than 25:1. They can be tilled into the soil or can be applied as a top dressing to existing landscaped areas.

Landscaped areas that include decorative turf grass are a major contributor to stormwater runoff contaminated by fertilizers and pesticides. In landscaped areas where soils have been compacted and not amended, soils can behave like impervious areas, generating considerable amounts of runoff. By properly amending soils, the runoff potential can be reduced. This also reduces irrigation needs, as water is more easily infiltrated into the ground and retained in the soil matrix where it can be utilized by plants. Fertilizer needs can also be reduced by incorporating appropriate soil amendments, thereby reducing stormwater pollution.

For more information on Soil Amendments please see **Fact Sheet 30** in Appendix 4.

3.7.2. Street Trees

Trees can be used as a stormwater management tool in additions to providing more commonly recognized benefits such as energy conservation, air quality improvement, and aesthetic enhancement. Tree surfaces (roots, foliage, bark, and branches) intercept, evaporate, transpire, store or convey precipitation before it reaches surrounding impervious surfaces. In bioretention cells or swales, tree roots build soil structure that enhances infiltration capacity and reduces erosion [41].

- Local community planning areas often have specific guidelines for the type and location of trees planted along public streets or rights-of-way. The extent and growth pattern of the root structure must be considered when trees are planted in bioretention areas or other stormwater facilities with under-drain structures or near paved areas such as driveways, sidewalks, utilities or streets.

For more information on Street Trees please see **Fact Sheet 31** in Appendix 4.

3.7.3. Plant Species Selection for Infiltration Areas

The proper selection of plant materials can improve the infiltration potential of landscape areas. Deep rooted plants help to build soil porosity. Plant leaf-surface area helps to collect rainwater before it lands on the soil, especially in light rains, increasing the overall water-holding potential of the landscape. A single street tree can have a total leaf surface area of several hundred square feet, depending on species and size. This above ground surface area created by trees and other plants greatly contributes to the water-holding capacity of the land.

A large number of plant species will survive periodic inundation. These plants provide a wide range of choices for planted infiltration/detention basins and drainage swales. Most inundated plants have a higher survival potential on well drained alluvial soils than on fine-textured shallow soils or clays. [38]. When designing landscapes for stormwater management, appropriate groundcover and plant species must be selected. Xeriscape plants, salt grass lawns, woody perennials, and cobbles can all be used, depending on the desired aesthetic effect.

Selection of appropriate plant material for LID projects is dependant on several factors These include:

- Micro-climatic conditions of planting area (i.e., sun exposure, temperature highs and lows, prevailing winds)
- Soil type (i.e., clay, sand, silt)
- Drought or temporary inundation tolerance
- Plants ability to aid in the removal of contaminants
- Visual characteristics of plants (texture, color, form)
- Maintenance requirements
- Non-invasive
- Disease resistance

Final selection of plant material needs to be made by a landscape architect experienced with LID improvement projects. Water retention areas and bio-swales need to have access for periodic maintenance activities.

For more information on Plant Species please see **Fact Sheet 32** in Appendix 4.

3.7.4. Landscape Maintenance for Stormwater Systems

All landscape treatments require maintenance. Landscapes designed to perform stormwater management functions are not necessarily more maintenance intensive than highly manicured conventional landscapes. A concave lawn requires the same mowing, fertilizing and weeding as a convex one and less irrigation after rain is filtered into the underlying soil. Sometimes infiltration basins may require a different kind of maintenance than conventionally practiced.

Typical maintenance activities include periodic inspection of surface drainage systems to ensure clear flow lines, repair of eroded surfaces, adjustment or repair of drainage structures, soil cultivation or aeration, care of plant materials, replacement of dead plants, replenishment of mulch cover, irrigation, fertilizing, pruning and mowing. Landscape maintenance can have a significant impact on soil permeability and its ability to support plant growth. Most plants concentrate the majority of their small absorbing roots in the upper 6 inches of the soil surface if the surface is protected by a mulch or forest litter. If the soil is exposed or bare, it can become so hot that surface roots will not grow in the upper 8 to 10 inches. The common practice of removing all leaf litter and detritus with leaf blowers creates a hard crusted soil surface of low permeability and high heat conduction. Proper mulching of the soil surface improves water retention and infiltration, while protecting the surface root zone from temperature extremes [38]. In addition to impacting permeability, landscape maintenance practices can have adverse effects on water quality. Because commonly used fertilizers and herbicides are a source of organic compounds, it is important to keep these practices to a minimum, and prevent over watering. Over watering can be a significant contributor to run off and dry weather flows. Watering should only occur to accommodate plant health and should be adjusted at least four times a year. When ever practical, utilize Weather Based Irrigation Controllers and follow real time evapotranspiration (plant water use) data from the California Irrigation Management Information System (CIMIS) from the Department of Water Resources. Organic methods for fertilizers and pest control (including Integrated Pest Management) should be utilized. When well-maintained and designed, landscaped concave surfaces, infiltration basins, swales and bio-retention areas can add aesthetic value while providing the framework for environmentally sound, comprehensive stormwater management systems.